Operation

REACTOR™ H-VR

313539F
ENG

Hydraulic Variable Ratio, Heated, Plural Component Proportioner. For spraying polyurethane foam and polyurea coatings. For professional use only.

Not for use in explosive atmospheres.

U.S. Patent Pending
Russian Patent No. 2359181

Important Safety Instructions
Read all warnings and instructions in this manual.
Save these instructions.

See page 2 for model information, including maximum working pressure.

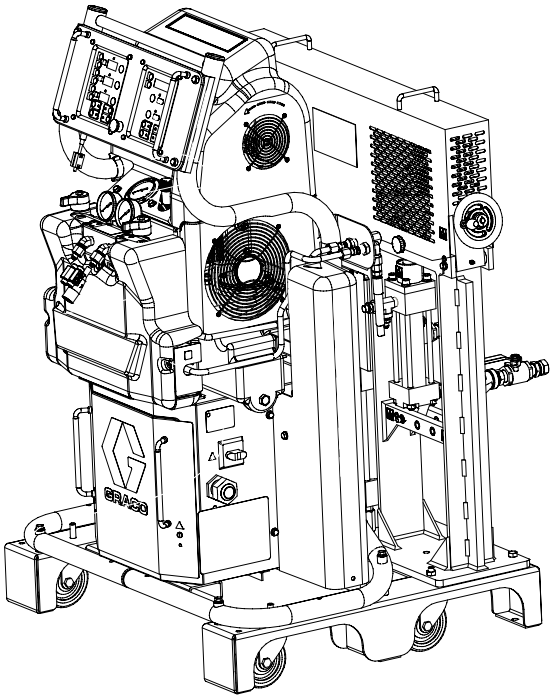

r_256886_313359_1A

9902471
Conforms to ANSI/UL Std. 499 Certified to CAN/CSA Std. C22.2 No. 88

PROVEN QUALITY. LEADING TECHNOLOGY.

Contents

Models 2
Supplied Manuals 3
Related Manuals 3
Warnings 4
Isocyanate Conditions 6
Material Self-ignition 6
Keep Components A and B Separate 6
Moisture Sensitivity of Isocyanates 6
Foam Resins with 245 fa Blowing Agents 6
Changing Materials 7
Typical Installation, with circulation 8
Typical Installation, without circulation 9
Component Identification 10
Reactor H-VR 10
Pump Assembly 12
Temperature Controls and Indicators 13
Main Power Switch 13
Red Stop Button 13
Actual Temperature Key/LED 13
Target Temperature Key/LED 13
Temperature Scale Keys/LEDs 14
Heater Zone On/Off Keys/LEDs 14
Temperature Arrow Keys 14
Temperature Displays 14
Circuit Breakers 14
Motor Controls and Indicators 15
Motor ON/OFF Key/LED 15
PARK Key/LED 15
PSI/BAR Keys/LEDs 15
Pressure Key/LED 15
Cycle Count Key/LED 16
Hydraulic Pressure Control Knob 16
Motor Control Arrow Keys 16
Spray Adjustments 16
Setup 17
Startup 22
Spraying 28
Standby 30
Shutdown 30
Pressure Relief Procedure 31
Fluid Circulation 32
Circulation Through Reactor 32
Circulation Through Gun Manifold 33
Diagnostic Codes 34
Temperature Control Diagnostic Codes 34
Motor Control Diagnostic Codes 35
Maintenance 36
Fluid Inlet Strainer Screen 37
Flushing 38
Dimensions 39
Technical Data 40
Performance Charts 41
Graco Standard Warranty 44
Graco Information 44

Models

Part, Series	Full Load Peak Amps* Per Phase	Voltage (phase)	System Watts†	Primary Heater Watts	Max Flow Rate◆ lb/min (kg/min)	Approximate Output per Cycle (A+B) gal. (liter)	Hydraulic Pressure Ratio	Maximum Fluid Working Pressure psi (MPa, bar)
256886	71	230V (3)	26,600	15,300	30 (13.6)	Variable	Variable	3500 (24.1, 241)
256887	41	400V (3)	26,600	15,300	30 (13.6)	Variable	Variable	3500 (24.1, 241)

* Full load amps with all devices operating at maximum capabilities. Fuse requirements at various flow rates and mix chamber sizes may be less.

◆ Maximum flow rate given for 60 Hz operation. For 50 Hz operation, maximum flow rate is 5/6 of 60 Hz maximum flow.

Supplied Manuals

The following manuals are shipped with the Reactor™ H-VR Proportioner. Refer to these manuals for detailed equipment information.

Order Part 15M334 for a compact disk of Reactor manuals translated in several languages.

Reactor Hydraulic Proportioner	
Part	**Description**
313540	Reactor H-VR Proportioner, Repair-Parts Manual (English)
Reactor Electrical Diagrams	
Part	**Description**
312064	Reactor Hydraulic Proportioner, Electrical Diagrams (English)
Fluid Pump	
Part	**Description**
313485	H-VR Pump Instructions-Parts Manual (English)

Circulation Kit	
Part	**Description**
309818	Instruction-Parts Manual (English)
Circulation Valve Kit	
Part	**Description**
312070	Instruction-Parts Manual (English)
Data Reporting Kit	
Part	**Description**
309867	Instruction-Parts Manual (English)
Rupture Disk Assembly Kit	
Part	**Description**
309969	Instruction-Parts Manual (English)
Proportioning Pump Repair Kits	
Part	**Description**
312071	Seal Kits Instruction-Parts Manual (English)

Related Manuals

The following manuals are for accessories used with the Reactor™.

Feed Pump Kits	
Part	**Description**
309815	Instruction-Parts Manual (English)
Air Supply Kit	
Part	**Description**
309827	Instruction-Parts Manual (English) for Feed Pump Air Supply Kit
Circulation and Return Tube Kits	
Part	**Description**
309852	Instruction-Parts Manual (English)
Heated Hose	
Part	**Description**
309572	Instruction-Parts Manual (English)

Warnings

The following warnings are for the setup, use, grounding, maintenance, and repair of this equipment. The exclamation point symbol alerts you to a general warning and the hazard symbol refers to procedure-specific risk. Refer back to these warnings. Additional, product-specific warnings may be found throughout the body of this manual where applicable.

⚠ WARNING	
	ELECTRIC SHOCK HAZARD This equipment must be grounded. Improper grounding, setup, or usage of the system can cause electric shock. • Turn off and disconnect power cord before servicing equipment. • Use only grounded electrical outlets. • Use only 3-wire extension cords. • Ensure ground prongs are intact on power and extension cords. • Do not expose to rain. Store indoors.
	TOXIC FLUID OR FUMES HAZARD Toxic fluids or fumes can cause serious injury or death if splashed in the eyes or on skin, inhaled, or swallowed. • Read MSDS's to know the specific hazards of the fluids you are using. • Store hazardous fluid in approved containers, and dispose of it according to applicable guidelines. • Always wear impervious gloves when spraying or cleaning equipment. • If this equipment is used with isocyanate material, see additional information on isocyanites in Isocyanate Conditions Section of this manual.
	PERSONAL PROTECTIVE EQUIPMENT You must wear appropriate protective equipment when operating, servicing, or when in the operating area of the equipment to help protect you from serious injury, including eye injury, inhalation of toxic fumes, burns, and hearing loss. This equipment includes but is not limited to: • Protective eyewear • Clothing and respirator as recommended by the fluid and solvent manufacturer • Gloves • Hearing protection
	SKIN INJECTION HAZARD High-pressure fluid from gun, hose leaks, or ruptured components will pierce skin. This may look like just a cut, but it is a serious injury that can result in amputation. **Get immediate surgical treatment.** • Do not point gun at anyone or at any part of the body. • Do not put your hand over the spray tip. • Do not stop or deflect leaks with your hand, body, glove, or rag. • Do not spray without tip guard and trigger guard installed. • Engage trigger lock when not spraying. • Follow **Pressure Relief Procedure** in this manual, when you stop spraying and before cleaning, checking, or servicing equipment.

⚠ WARNING

FIRE AND EXPLOSION HAZARD

Flammable fumes, such as solvent and paint fumes, in **work area** can ignite or explode. To help prevent fire and explosion:

- Use equipment only in well ventilated area.
- Eliminate all ignition sources; such as pilot lights, cigarettes, portable electric lamps, and plastic drop cloths (potential static arc).
- Keep work area free of debris, including solvent, rags and gasoline.
- Do not plug or unplug power cords, or turn power or light switches on or off when flammable fumes are present.
- Ground all equipment in the work area. See **Grounding** instructions.
- Use only grounded hoses.
- Hold gun firmly to side of grounded pail when triggering into pail.
- If there is static sparking or you feel a shock, **stop operation immediately.** Do not use equipment until you identify and correct the problem.
- Keep a working fire extinguisher in the work area.

PRESSURIZED ALUMINUM PARTS HAZARD

Do not use 1,1,1-trichloroethane, methylene chloride, other halogenated hydrocarbon solvents or fluids containing such solvents in pressurized aluminum equipment. Such use can cause serious chemical reaction and equipment rupture, and result in death, serious injury, and property damage.

EQUIPMENT MISUSE HAZARD

Misuse can cause death or serious injury.

- Do not operate the unit when fatigued or under the influence of drugs or alcohol.
- Do not exceed the maximum working pressure or temperature rating of the lowest rated system component. See **Technical Data** in all equipment manuals.
- Do not leave the work area while equipment is energized or under pressure. Turn off all equipment and follow the **Pressure Relief Procedure** in this manual when equipment is not in use.
- Check equipment daily. Repair or replace worn or damaged parts immediately with genuine manufacturer's replacement parts only.
- Do not alter or modify equipment.
- Use equipment only for its intended purpose. Call your distributor for information.
- Route hoses and cables away from traffic areas, sharp edges, moving parts, and hot surfaces.
- Do not kink or over bend hoses or use hoses to pull equipment.
- Keep children and animals away from work area.
- Comply with all applicable safety regulations.

MOVING PARTS HAZARD

Moving parts can pinch or amputate fingers and other body parts.

- Keep clear of moving parts.
- Do not operate equipment with protective guards or covers removed.
- Pressurized equipment can start without warning. Before checking, moving, or servicing equipment, follow the **Pressure Relief Procedure** in this manual. Disconnect power or air supply.

OR

BURN HAZARD

Equipment surfaces and fluid that's heated can become very hot during operation. To avoid severe burns:

- Do not touch hot fluid or equipment.
- Wait until equipment/fluid has cooled completely.

Isocyanate Conditions

Spraying materials containing isocyanates creates potentially harmful mists, vapors, and atomized particulates.

Read material manufacturer's warnings and material MSDS to know specific hazards and precautions related to isocyanates.

Prevent inhalation of isocyanate mists, vapors, and atomized particulates by providing sufficient ventilation in the work area. If sufficient ventilation is not available, a supplied-air respirator is required for everyone in the work area.

To prevent contact with isocyanates, appropriate personal protective equipment, including chemically impermeable gloves, boots, aprons, and goggles, is also required for everyone in the work area.

Material Self-ignition

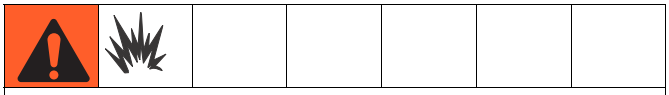

Some materials may become self-igniting if applied too thickly. Read material manufacturer's warnings and material MSDS.

Keep Components A and B Separate

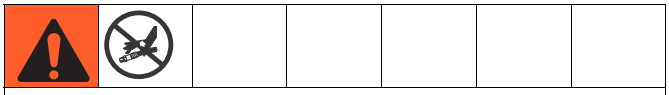

Cross-contamination can result in cured material in fluid lines which could cause serious injury or damage equipment. To prevent cross-contamination of the equipment's wetted parts, never interchange component A (isocyanate) and component B (resin) parts.

Moisture Sensitivity of Isocyanates

Isocyanates (ISO) are catalysts used in two component foam and polyurea coatings. ISO will react with moisture (such as humidity) to form small, hard, abrasive crystals, which become suspended in the fluid. Eventually a film will form on the surface and the ISO will begin to gel, increasing in viscosity. If used, this partially cured ISO will reduce performance and the life of all wetted parts.

NOTE:

The amount of film formation and rate of crystallization varies depending on the blend of ISO, the humidity, and the temperature.

To prevent exposing ISO to moisture:

- Always use a sealed container with a desiccant dryer in the vent, or a nitrogen atmosphere. **Never** store ISO in an open container.
- Use moisture-proof hoses specifically designed for ISO, such as those supplied with your system.
- Never use reclaimed solvents, which may contain moisture. Always keep solvent containers closed when not in use.
- Never use solvent on one side if it has been contaminated from the other side.
- Always park pumps when you shutdown, see page 30.
- Always lubricate threaded parts, except for GC1128, GC0518, GC0697, and GC2150, with Part 217374 ISO pump oil or grease when reassembling.

Foam Resins with 245 fa Blowing Agents

Some foam blowing agents will froth at temperatures above 90°F (33°C) when not under pressure, especially if agitated. To reduce frothing, minimize preheating in a circulation system.

Changing Materials

- When changing materials, flush the equipment multiple times to ensure it is thoroughly clean.
- Always clean the fluid inlet strainers after flushing.
- Check with your material manufacturer for chemical compatibility.
- Most materials use ISO on the A side, but some use ISO on the B side.
- Epoxies often have amines on the B (hardener) side. Polyureas often have amines on the B (resin) side.

Typical Installation, with circulation

Key for FIG. 1

A Reactor H-VR Proportioner
B Heated Hose
C Fluid Temperature Sensor (FTS)
D Heated Whip Hose
E Fusion Spray Gun
F Gun Air Supply Hose
G Feed Pump Air Supply Lines
J Fluid Supply Lines
K Feed Pumps
L Agitator
M Desiccant Dryer
P Gun Fluid Manifold (part of gun)
R Circulation Lines
S Fluid Inlet
T Hose Manifold

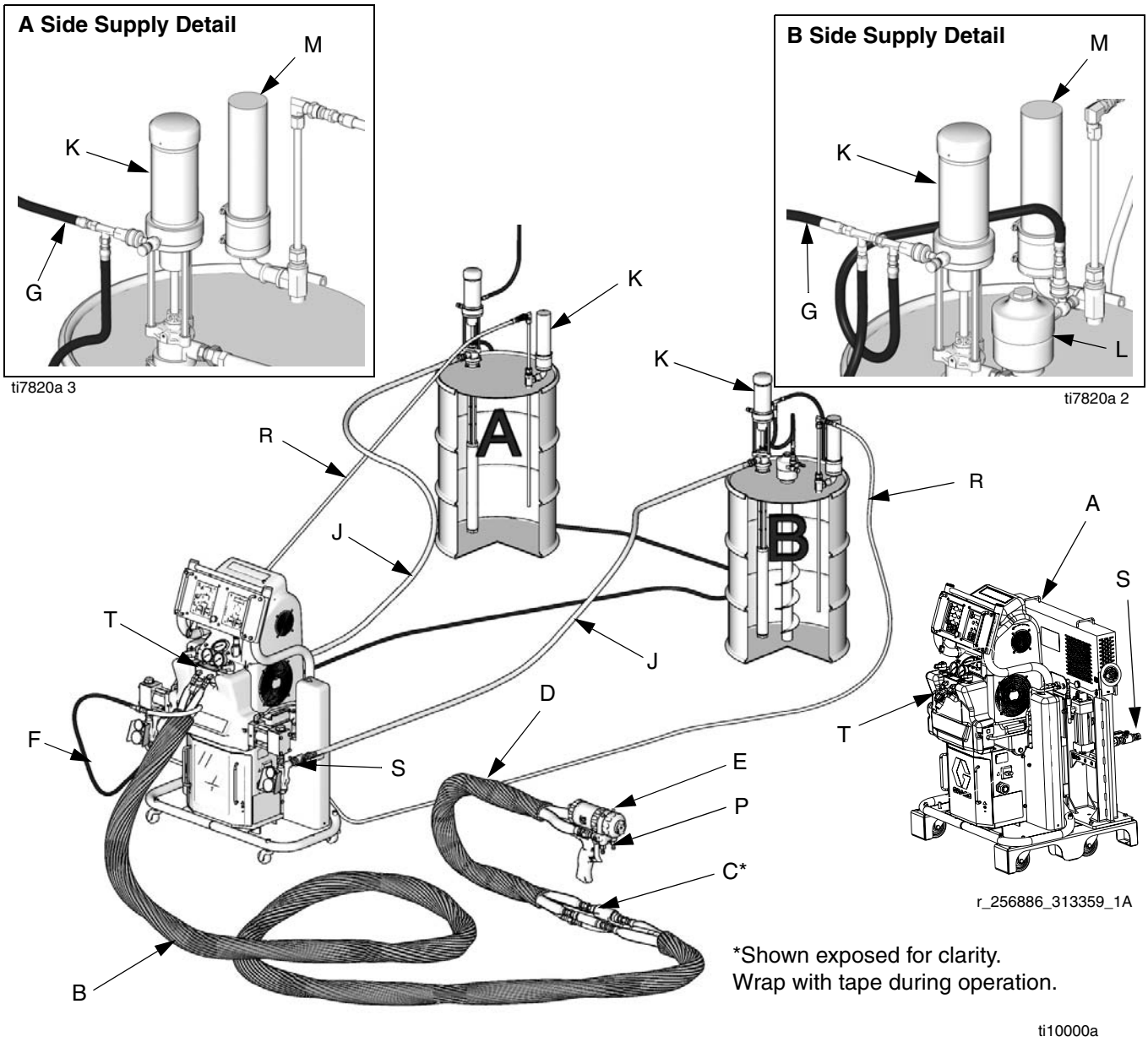

FIG. 1: Typical Installation, with circulation

Typical Installation, without circulation

Key for FIG. 2

A Reactor H-VR Proportioner
B Heated Hose
C Fluid Temperature Sensor (FTS)
D Heated Whip Hose
E Fusion Spray Gun
F Gun Air Supply Hose
G Feed Pump Air Supply Lines
H Waste Containers
J Fluid Supply Lines
K Feed Pumps
L Agitator
M Desiccant Dryer
N Bleed Lines
P Gun Fluid Manifold (part of gun)
S Fluid Inlet
T Hose Manifold

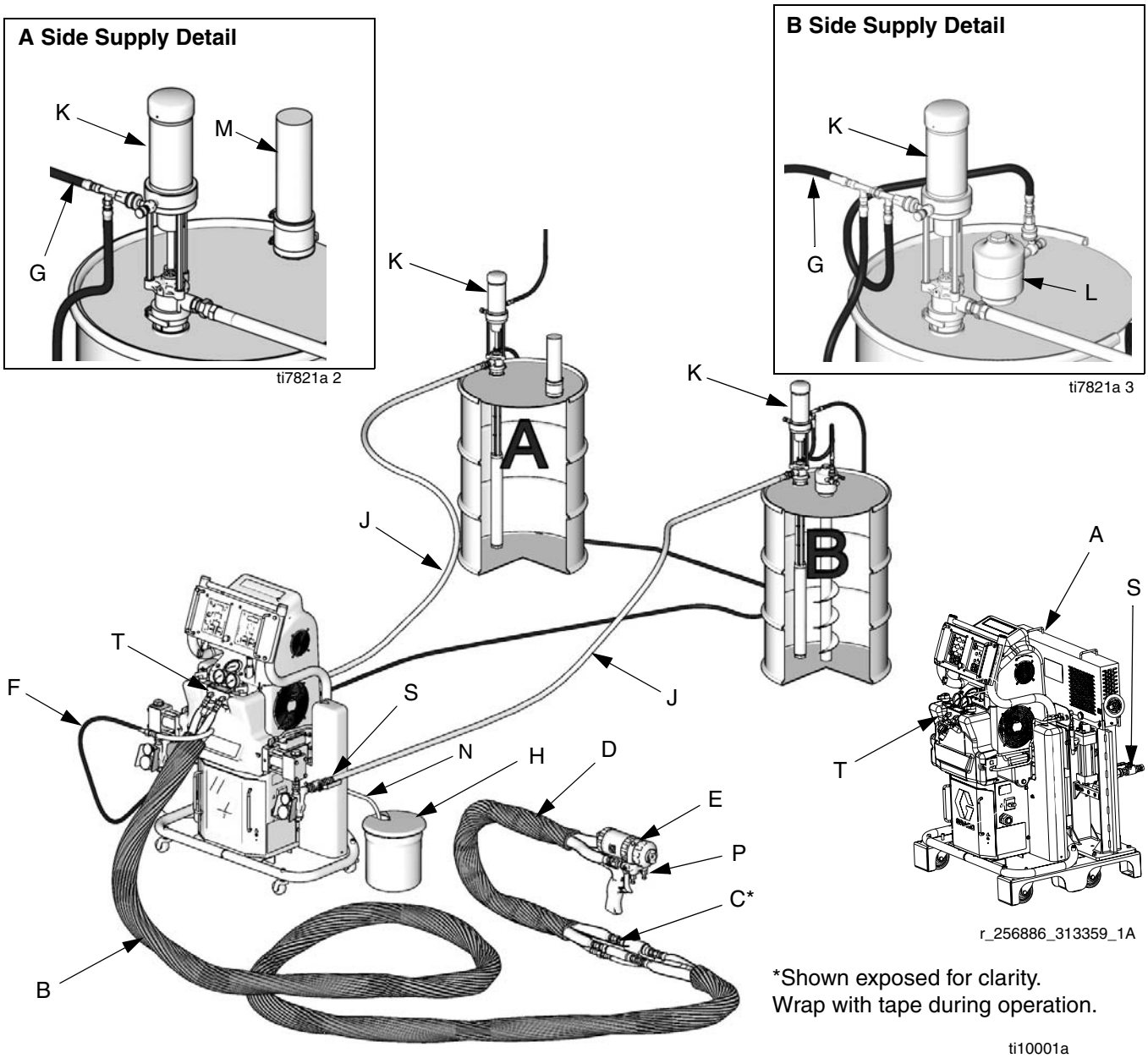

FIG. 2: Typical Installation, without circulation

Component Identification

NOTICE

To prevent damage to soft key buttons, do not press the buttons with sharp objects such as pens, plastic cards, or fingernails.

Reactor H-VR

Key for Fig. 3

BA Component A Pressure Relief Outlet
BB Component B Pressure Relief Outlet
EC Heated Hose Electrical Connector
EM Electric Motor, Fan, and Belt Drive (behind shroud)
FA Component A Fluid Manifold Inlet (on left side of manifold block)
FB Component B Fluid Manifold Inlet
FH Fluid Heater (behind shroud)
FM Reactor Fluid Manifold
FV Fluid Inlet Valve (B side shown)
GA Component A Outlet Pressure Gauge
GB Component B Outlet Pressure Gauge
HA Component A Hose Connection
HB Component B Hose Connection
HC Hydraulic Pressure Control
HP Hydraulic Pressure Gauge
LR ISO Lube Pump Reservoir
MC Motor Control Display
MP Main Power Switch
OP Overpressure Rupture Disk Assembly (on rear of A and B pumps)
RS Red Stop Button
SA Component A PRESSURE RELIEF/SPRAY Valve
SB Component B PRESSURE RELIEF/SPRAY Valve
SC Fluid Temperature Sensor Cable
SN Serial Number Plate (one inside cabinet, one on right side of cabinet)
SR Electrical Cord Strain Relief
TA Component A Pressure Transducer (behind gauge GA)
TB Component B Pressure Transducer (behind gauge GB)
TC Temperature Control Display
TD Oil Cooler
VR Pump Assembly (see page 12)

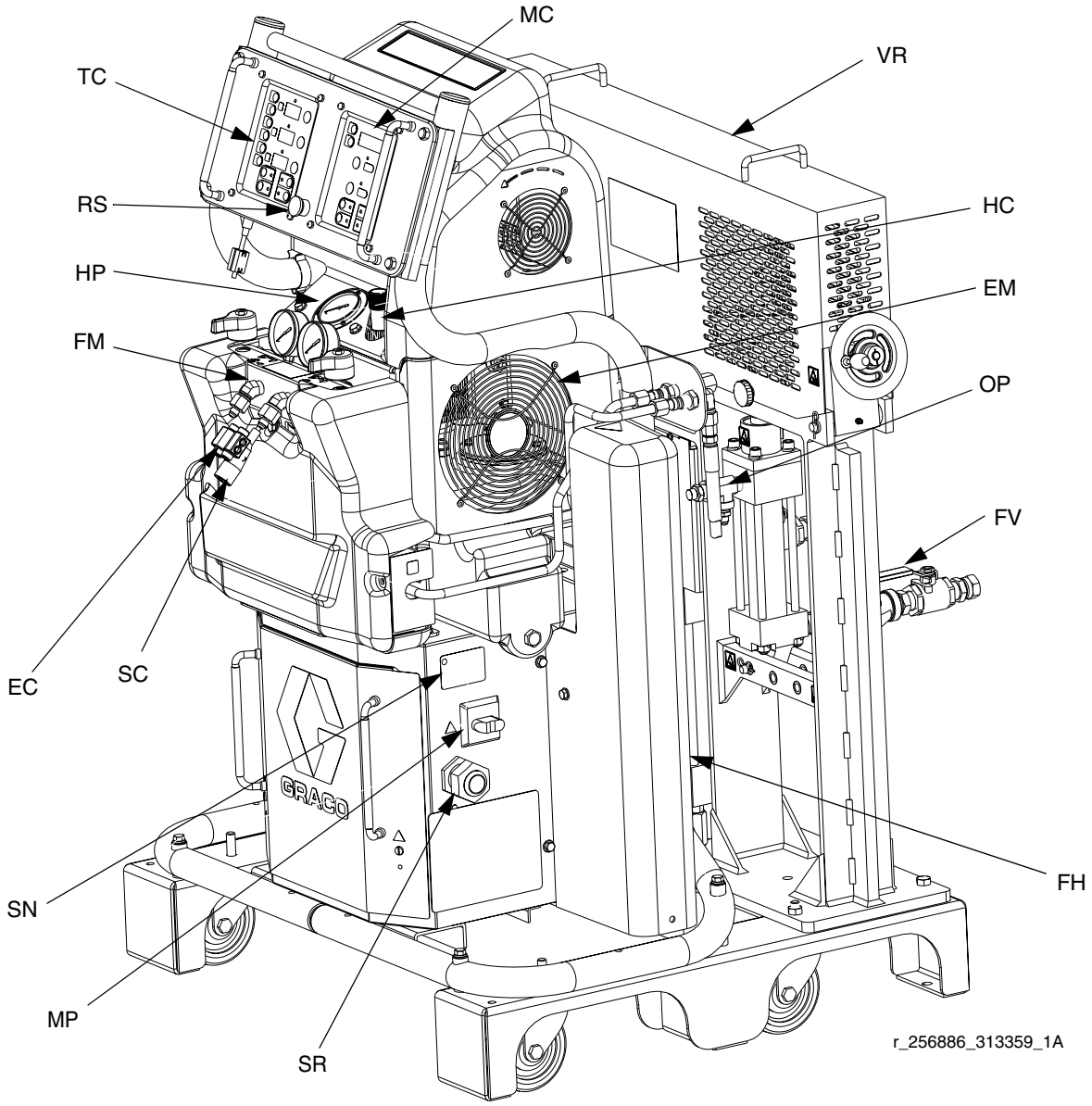

Detail of Reactor Fluid Manifold (shroud removed for clarity)

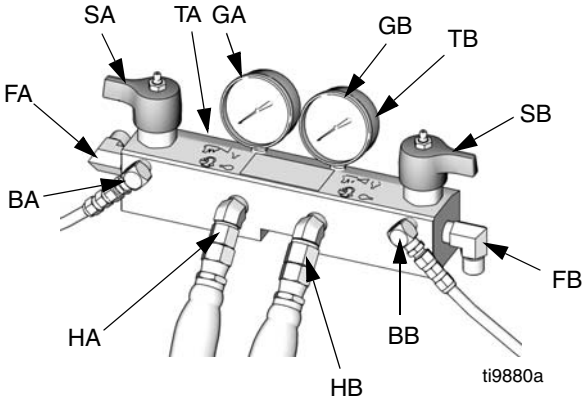

Detail of Serial No. Plate (inside cabinet)

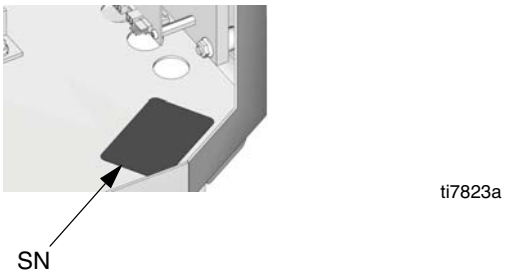

FIG. 3: Component Identification (15.3 kW Model Shown)

Pump Assembly

Key for FIG. 4.

AA Component A Pump
AB Component B Pump
AC Hydraulic Proportioner Pump
AD Yoke and Rod Guide Assembly
AE Pump Drive Link
AF Pump Adapter
AG Pivot Bracket
AH Guard
AJ Clamping Knob
AK Lube Fitting
AL Ratio Lock Handle
AM Ratio Adjustment Wheel
AN Frame
AP Ratio Adjustment Screw

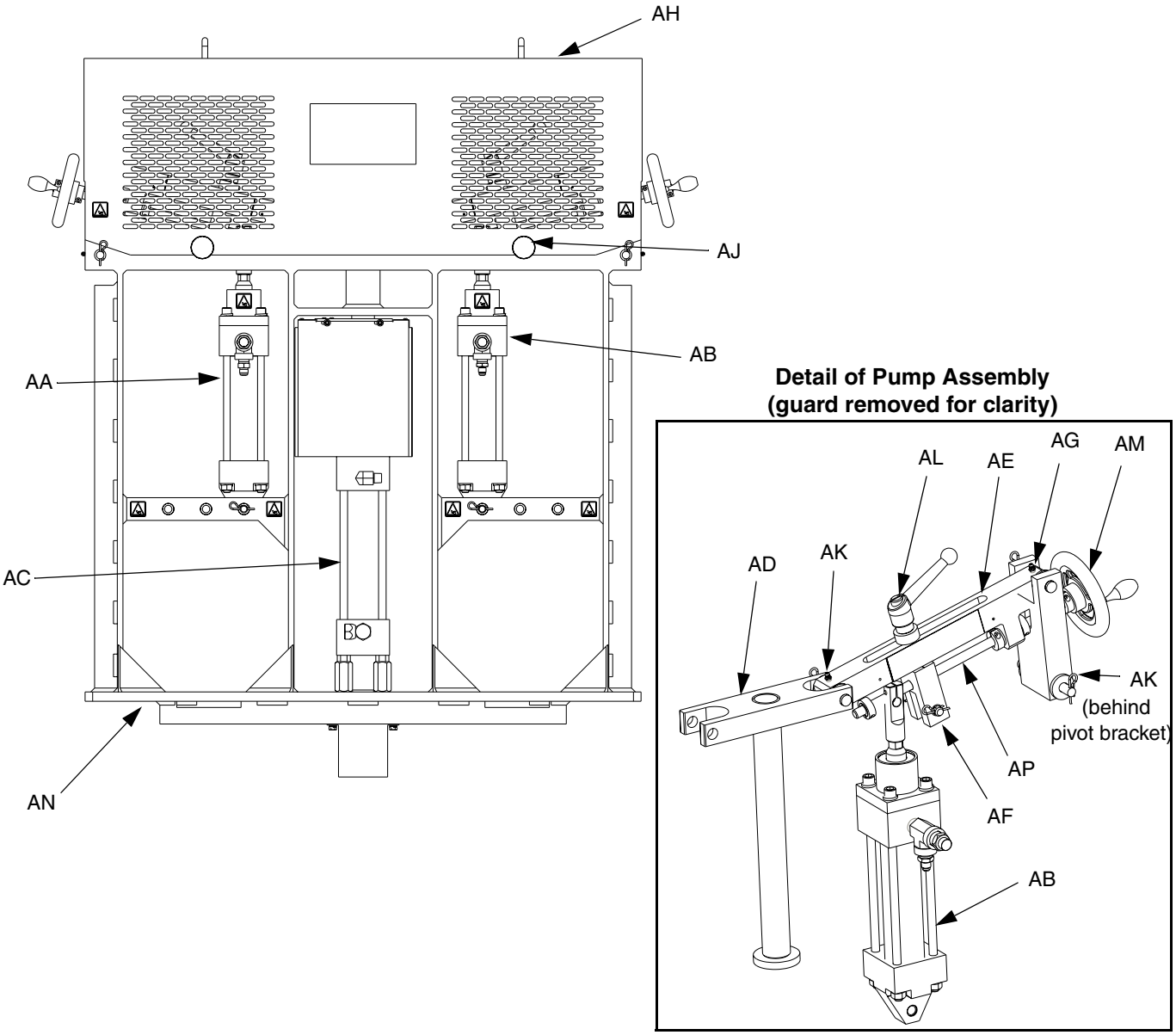

FIG. 4: Front View of Pump Assembly

Temperature Controls and Indicators

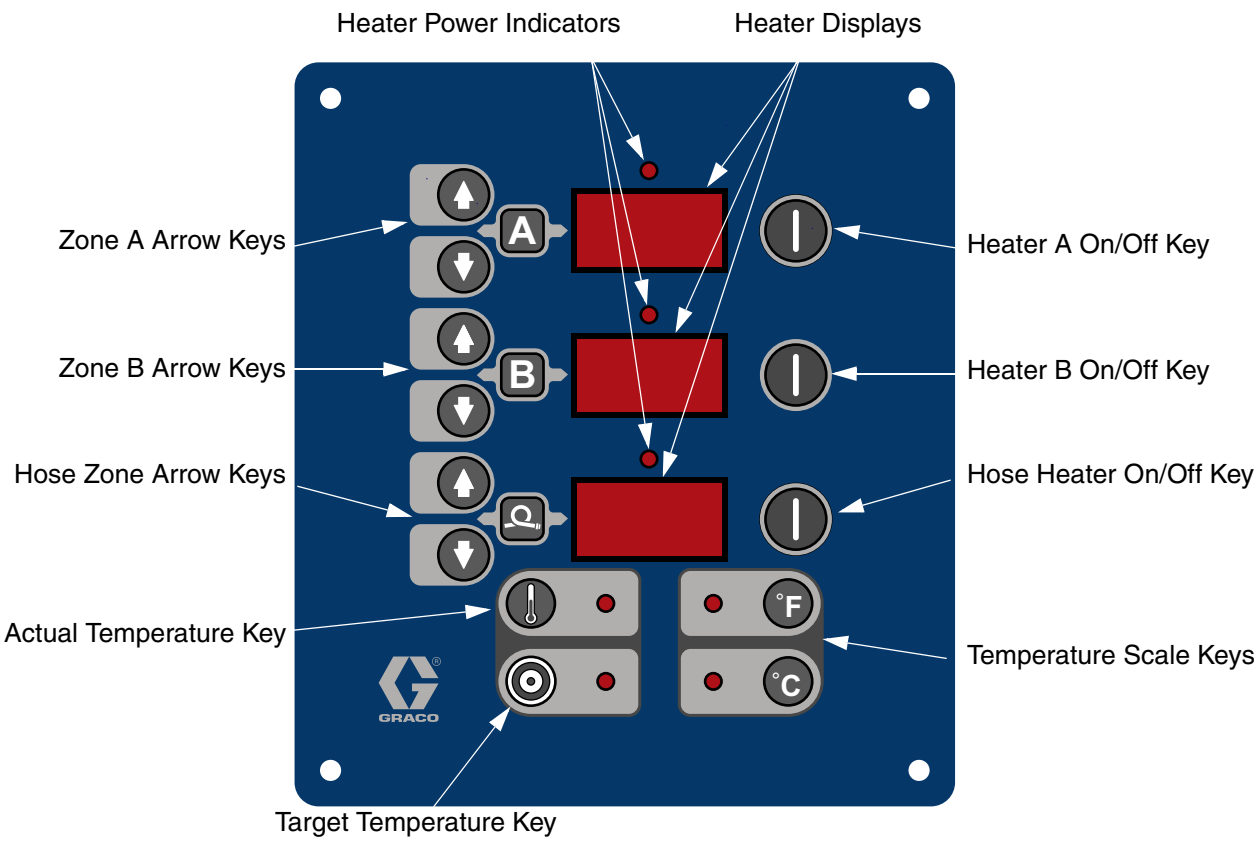

FIG. 5. Temperature Controls and Indicators

Main Power Switch

Located on right side of unit, page 11. Turns Reactor power ON and OFF 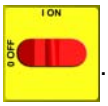 . Does not turn heater zones or pumps on.

Red Stop Button

Located between temperature control panel and motor control panel, page 11. Press to shut off motor and heater zones only. Use main power switch to shut off all power to unit.

Actual Temperature Key/LED

Press to display actual temperature.

Press and hold to display electrical current.

Target Temperature Key/LED

Press to display target temperature.

Press and hold to display heater control circuit board temperature.

Temperature Scale Keys/LEDs

Press °F or °C to change temperature scale.

Heater Zone On/Off Keys/LEDs

Press to turn heater zones on and off. Also clears heater zone diagnostic codes, see page 34.

NOTE:
LEDs flash when heater zones are on. The duration of each flash shows the extent that the heater is turned on.

Temperature Arrow Keys

Press , then press or to adjust temperature settings in 1 degree increments.

Temperature Displays

Show actual temperature or target temperature of heater zones, depending on selected mode. Defaults to actual at startup. Range is 32-190°F (0-88°C) for A and B, 32-180°F (0-82°C) for hose.

Circuit Breakers

Located inside Reactor cabinet.

Ref.	Size	Component
CB1	50 A	Hose/Transformer Secondary
CB2	40 A	Transformer Primary
CB3	50 A	Heater A
CB4	50 A	Heater B
CB5	20 A	Motor/Pumps

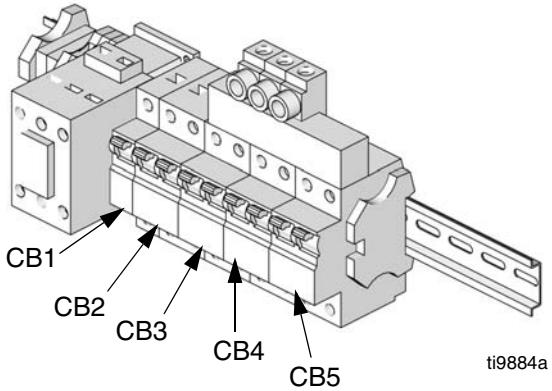

For wiring and cabling, see repair manual 313540.

Motor Controls and Indicators

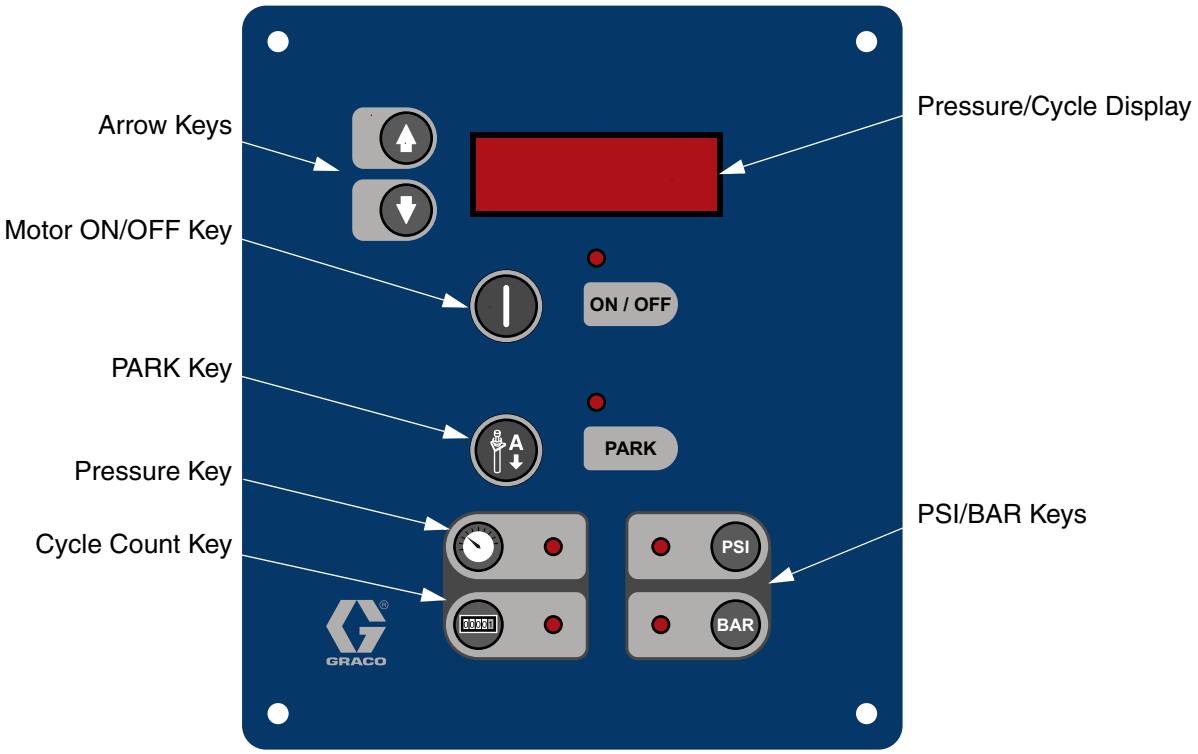

FIG. 6. Motor Controls and Indicators

Motor ON/OFF Key/LED

Press to turn motor ON and OFF. Also clears some motor control diagnostic codes, see page 35.

PARK Key/LED

Press at end of day to cycle component A pump to home position, submerging displacement rod. Trigger gun until pump stops. Once parked, motor will automatically shut off.

PSI/BAR Keys/LEDs

Press PSI or BAR to change pressure scale.

Pressure Key/LED

Press to display fluid pressure.

NOTE:

If pressures are imbalanced, display shows higher of two pressures.

Cycle Count Key/LED

Press to display cycle count.

NOTE:

To clear counter, press and hold for 3 sec.

Hydraulic Pressure Control Knob

Use to adjust hydraulic pressure available to the hydraulic drive system. Turn knob (HC) clockwise to increase pressure and counterclockwise to decrease pressure. Use hydraulic pressure gauge (HP, page 11) to view hydraulic pressure.

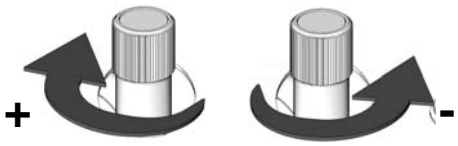

ti7731a ti7732a

NOTE:

Component A and B outlet pressures will be higher than the hydraulic set pressure, depending on the model. Component A and B pressure may be viewed on the pressure gauges (GA, GB), or the higher of the two pressures may be displayed on the motor control panel (MC). See FIG. 3, page 11.

Motor Control Arrow Keys

Use or to:

- Adjust pressure imbalance settings, page 26.
- Adjust standby settings, page 30.

Spray Adjustments

Flow rate, atomization, and amount of overspray are affected by four variables.

- **Fluid pressure setting.** Too little pressure results in an uneven pattern, coarse droplet size, low flow, and poor mixing. Too much pressure results in excessive overspray, high flow rates, difficult control, and excessive wear.
- **Fluid temperature.** Similar effects to fluid pressure setting. The A and B temperatures can be offset to help balance the fluid pressure.
- **Mix chamber size.** Choice of mix chamber is based on desired flow rate, fluid viscosity, and selected ratio.
- **Clean-off air adjustment.** Too little clean-off air results in droplets building up on the front of the nozzle, and no pattern containment to control overspray. Too much clean-off air results in air-assisted atomization and excessive overspray.

Setup

NOTICE

Proper system setup, startup, and shutdown procedures are critical to electrical equipment reliability. The following procedures ensure steady voltage. Failure to follow these procedures will cause voltage fluctuations that can damage electrical equipment and void the warranty.

1. Locate Reactor

a. Locate Reactor on a level surface. See **Dimensions**, page 39, for clearance and mounting hole dimensions.

b. Do not expose Reactor to rain.

NOTICE

Bolt Reactor to original shipping pallet before lifting.

c. Use the casters to move Reactor to a fixed location, or bolt to shipping pallet and move with forklift.

d. To mount on a truck bed or tailer, remove casters and bolt directly to truck or trailer bed. See page 39.

2. General equipment guidelines

- Determine the correct size generator. Using the correct size generator and proper air compressor will enable the proportioner to run at a nearly constant RPM. Failure to do so will cause voltage fluctuations that can damage electrical equipment. Ensure the generator matches the voltage and phase of the proportioner.

  Use the following procedure to determine the correct size generator.

  a. List system components that use peak load requirements in watts.

  b. Add the wattage required by the system components.

  c. Perform the following equation:
  Total watts x 1.25 = kVA (kilovolt-amperes)

  d. Select a generator size that is equal to or greater than the determined kVA.

- Use proportioner power cords that meet or exceed the requirements listed in Table 2. Failure to do so will cause voltage fluctuations that can damage electrical equipment.

- Use an air compressor with constant speed head unloading devices. Direct online air compressors that start and stop during a job will cause voltage fluctuations that can damage electrical equipment.

- Maintain and inspect the generator, air compressor, and other equipment per the manufacturer recommendations to avoid an unexpected shutdown. Unexpected equipment shutdown will cause voltage fluctuations that can damage electrical equipment.

- Use a wall power supply with enough current to meet system requirements. Failure to do so will cause voltage fluctuations that can damage electrical equipment.

3. Electrical requirements

See table 1.

Installing this equipment requires access to parts which may cause electric shock or other serious injury if work is not performed properly. Have a qualified electrician connect power and ground to main power switch terminals, see step 3. Be sure your installation complies with all National, State and Local safety and fire codes.

Table 1: Electrical Requirements (kW/Full Load Amps)

Part	Model	Voltage (phase)	Full Load Peak Amps*	System Watts**
256886	H-VR	230V (3)	71	26,600
256887	H-VR	400V (3)	41	26,600

* Full load amps with all devices operating at maximum capabilities. Fuse requirements at various flow rates, ratios, and mix chamber sizes may be less.

** Total system watts, based on maximum hose length for each unit, 410 ft (125 m) including whip hose.

4. Connect electrical cord

NOTE:

Power cord is not suppled. See table 2.

Table 2: Power Cord Requirements

Part	Model	Cord Specification AWG (mm^2)
256886	H-VR	4 (21.2), 3 wire + ground
256887	H-VR	8 (8.4), 4 wire + ground

a. **230V, 3 phase:** Using 5/32 or 4 mm hex allen wrench, connect three power leads to L1, L2, and L3. Connect green to ground (GND).

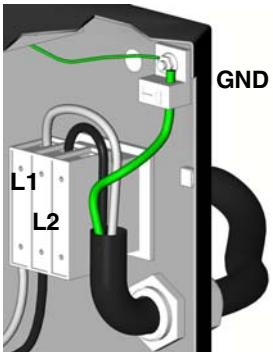

ti2515b

b. **400V, 3 phase:** Using 5/32 or 4 mm hex allen wrench, connect three power leads to L1, L2, and L3. Connect neutral to N. Connect green to ground (GND).

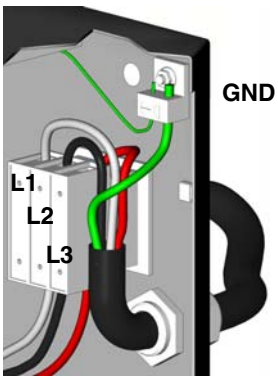

ti3248b

NOTE:

The motor must rotate counter-clockwise when viewed from shaft end. To reverse rotation, disconnect power and reverse power leads L1 and L2.

5. Connect feed pumps

a. Install feed pumps (K) in component A and B supply drums. See FIG. 1 and FIG. 2, pages 8 and 9.

b. Seal component A drum and use desiccant dryer (M) in vent.

c. Install agitator (L) in component B drum, if necessary.

d. Ensure A and B inlet valves (FV) are closed.

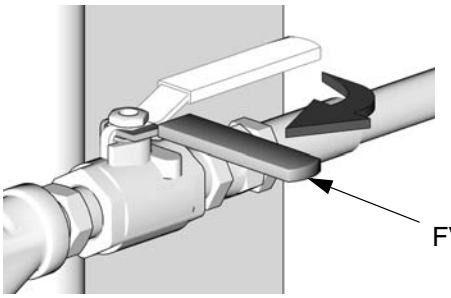

ti10971a

NOTE:

Supply hoses from feed pumps should be 3/4 in. (19 mm) ID.

e. Connect and tighten component A and B supply hose to the 3/4 npt(f) swivel on the component A and B inlet valve.

6. Connect pressure relief lines

Do not install shutoffs downstream of the PRESSURE RELIEF/SPRAY valve outlets (BA, BB). The valves function as overpressure relief valves when set to SPRAY . Lines must be open so valves can automatically relieve pressure when machine is operating.
If circulating fluid back to the supply drums, use high pressure hose rated to withstand the maximum working pressure of this equipment.

a. **Recommended:** Connect high pressure hose (R) to relief fittings (BA, BB) of both PRESSURE RELIEF/SPRAY valves, Route hose back to component A and B drums. See FIG. 1, page 8.

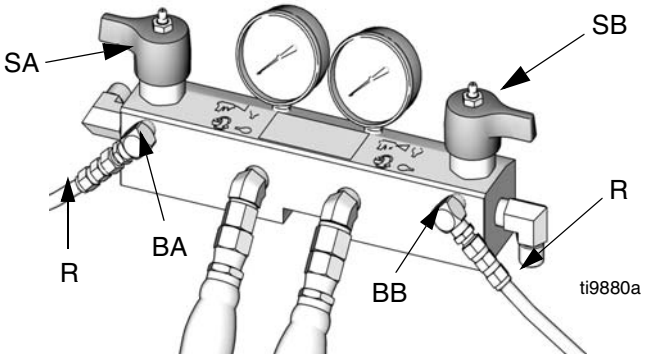

b. **Alternatively:** Secure supplied bleed tubes (N) in grounded, sealed waste containers (H). See FIG. 2, page 9.

7. Install Fluid Temperature Sensor (FTS)

The Fluid Temperature Sensor (FTS) is supplied. Install FTS between main hose and whip hose. See Heated Hose manual 309572 for instructions.

8. Connect heated hose

NOTE:

See Heated Hose manual 309572 for detailed instructions on connecting heated hoses.

NOTE:

If spraying at a ratio other than 1:1, an E24 may occur. Size hoses and mix chamber appropriately to avoid pressure imbalance.

NOTICE
The fluid temperature sensor (C) and whip hose (D) must be used with heated hose, see page 19. Hose length, including whip hose, must be 60 ft (18.3 m) minimum.

a. Turn main power OFF 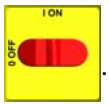

.

b. Assemble heated hose sections, FTS, and whip hose.

c. Connect A and B hoses to A and B outlets on Reactor fluid manifold (FM). Hoses are color coded: red for component A (ISO), blue for component B (RES). Fittings are sized to prevent connection errors.

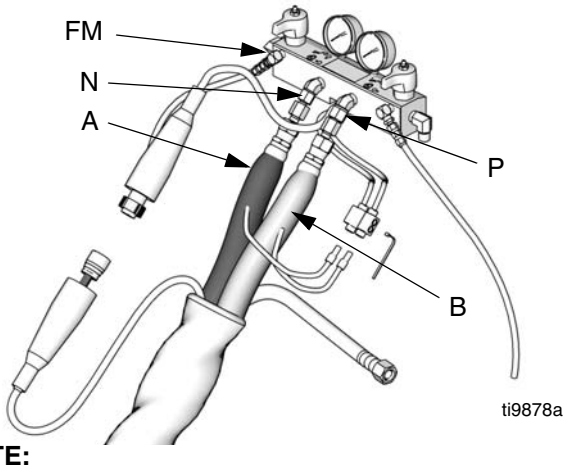

NOTE:

Manifold hose adapters (N, P) allow use of 1/4 in. and 3/8 in. ID fluid hoses. To use 1/2 in. (13 mm) ID fluid hoses, remove adapters from fluid manifold and install as needed to connect whip hose.

d. Connect cables (Y). Connect electrical connectors (V). Be sure cables have slack when hose bends. Wrap cable and electrical connections with electrical tape.

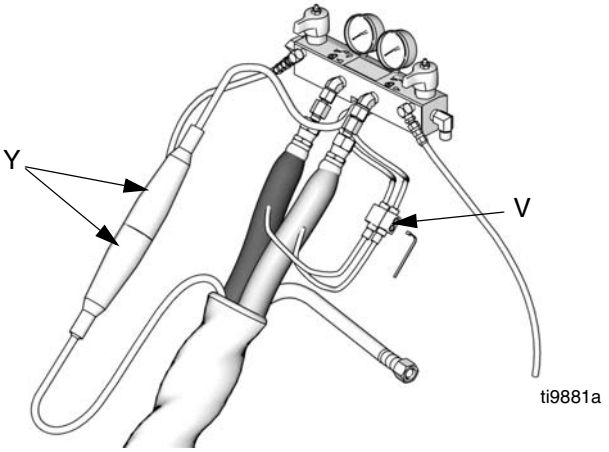

9. Close gun fluid manifold valves A and B

10. Connect whip hose to gun fluid manifold

Do not connect manifold to gun.

11. Pressure check hose

See hose manual. Pressure check for leaks. If no leaks, wrap hose and electrical connections to protect from damage.

12. Ground system

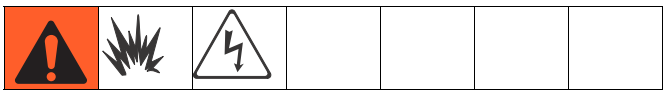

a. *Reactor:* is grounded through power cord. See page 18.

b. *Spray gun:* connect whip hose ground wire to FTS, page 19. Do not disconnect wire or spray without whip hose.

c. *Fluid supply containers:* follow your local code.

d. *Object being sprayed:* follow your local code.

e. *Solvent pails used when flushing:* follow your local code. Use only metal pails, which are conductive, placed on a grounded surface. Do not place pail on a nonconductive surface, such as paper or cardboard, which interrupts grounding continuity

f. *To maintain grounding continuity when flushing or relieving pressure,* hold a metal part of spray gun firmly to the side of a grounded *metal* pail, then trigger gun.

13. Check hydraulic fluid level

a. Hydraulic reservoir is filled at the factory. Check fluid level before operating the first time, and weekly thereafter. See **Maintenance**, page 36.

Startup

Do not operate Reactor without all covers and shrouds in place. Do not attempt to change ratio while machine is pressurized or running. Do not loosen ratio lock handle if A and B component pumps are pressurized or while the pumps are operating.

1. Select ratio

The stroke lengths of the fluid pumps (AA and AB) can be adjusted to select the ratio. The frame (AN) has three pin positions for the bottom of the pump and a slider mechanism at the top of the pump, which allows for positioning of the pump at any required position. This allows for a a range of ratio settings between the first and last settings on the pump drive link.

a. Shutdown system, see page 30.

b. Relieve pressure, see page 31.

c. Loosen four clamping knobs (AJ) and remove guard (AH).

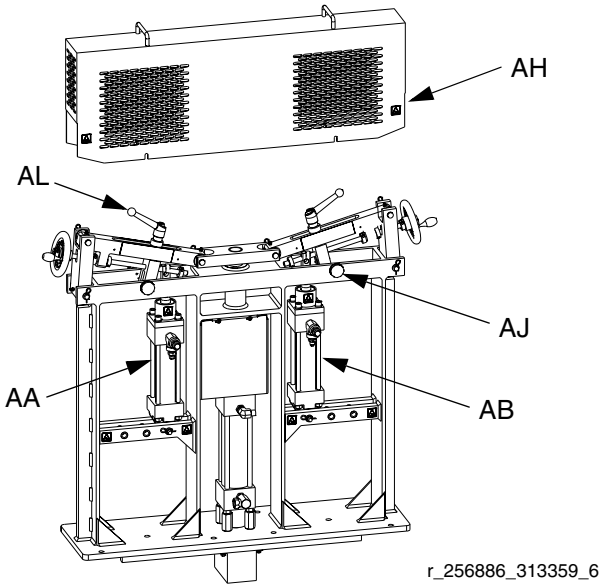

FIG. 7: Front View

d. Use label on the pump drive link (AE) to identify the correct position of the pump that needs to be adjusted. See FIG. 8.

See table 3 for ratios with the one pump set at 1.0 and available settings for the second pump.

Table 3: Ratio Range

Pump with higher flow		Pump with lower flow		Ratio
POSN #1	1.0	POSN #1	1.0	1:1
	1.0		0.95	1.05
	1.0		0.90	1.11:1
	1.0		0.85	1.2:1
POSN #1	1.0	POSN #2	0.80	1.25:1
	1.0		0.75	1.33:1
	1.0		0.70	1.42:1
	1.0		0.66	1.51:1
	1.0		0.60	1.66:1
POSN #1	1.0	POSN #3	0.55	1.88:1
	1.0		0.50	2:1
	1.0		0.45	2.22:1
	1.0		0.40	2.5:1

Pump A when viewed from rear of machine

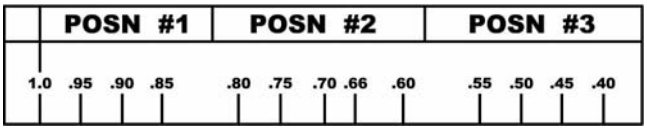

Pump B when viewed from rear of machine

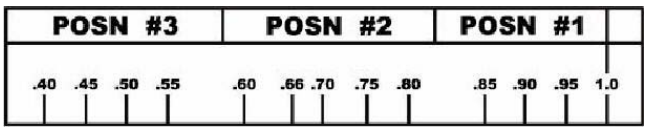

FIG. 8: Pump Ratio Indicator Labels

e. Remove base pin (BP) from frame (AN) if the base of the pump needs to be moved. See FIG. 8.

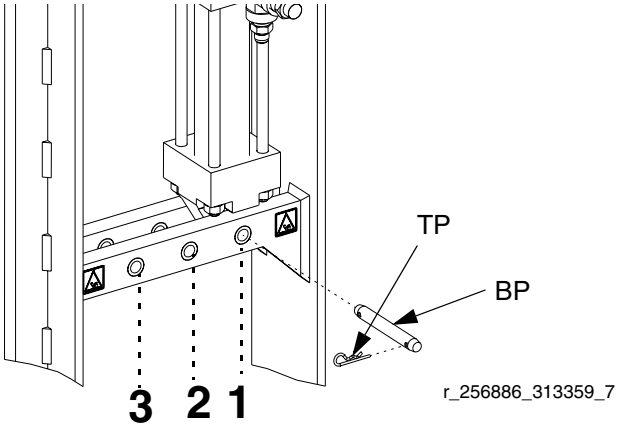

FIG. 9

f. Loosen ratio lock handle (AL) over the pump that needs adjustment. Use a soft mallet to loosen ratio lock handle if necessary. Turn ratio adjustment wheel (AM) until the mark on the pump adapter block (AF) lines up with the correct position on the ratio indicator label on the pump drive link (AE).

g. Reinstall base pin (BP) if it was removed. Ensure bottom of pump is in correct position. See FIG. 8.

NOTICE
Move bottom position of pump once top of pump enters a new position #. Failure to adjust bottom position of pump will damage the machine.

NOTE:

For highest volume of material: Ensure pump has longest stroke length. Set the pump with more flow closest to hydraulic pump (AC) or at 1.0 to achieve maximum flowrates. See FIG. 8.

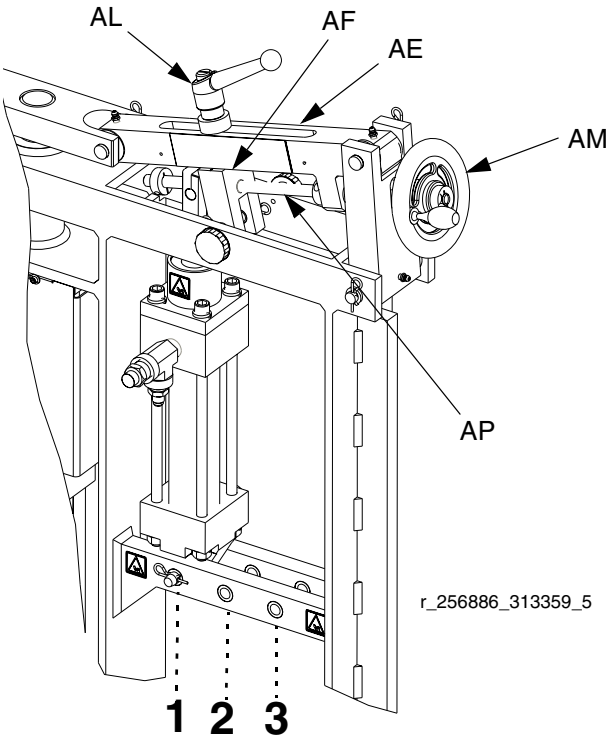

FIG. 10

h. Ensure top of pump is in correct ratio position. Tighten ratio lock handle (AL).

i. Install guard (AH) and tighten clamping knobs (AJ). See FIG. 7.

2. Load fluid with feed pumps

NOTE:

The Reactor is tested with oil at the factory. Flush out the oil with a compatible solvent before spraying. See page 38.

a. Check that all **Setup** steps are complete.

b. Turn on component B agitator, if used.

c. Turn both PRESSURE RELIEF/SPRAY valves (SA, SB) to SPRAY .

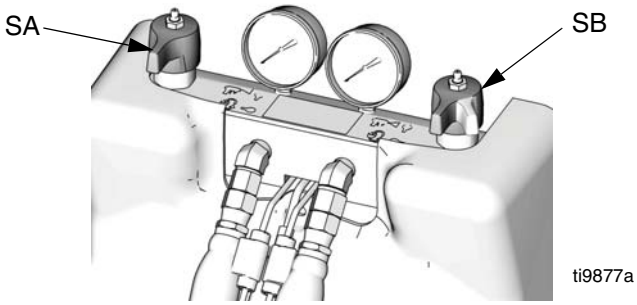

d. Start feed pumps.

e. Open fluid inlet valves (FV). Check for leaks.

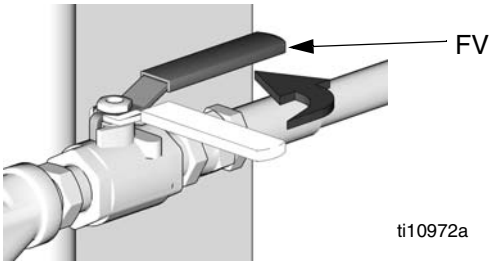

Do not mix components A and B during startup. Always provide two grounded waste containers to keep component A and component B fluids separate.

f. Use feed pumps to load system. Hold gun fluid manifold over two grounded waste containers.

Open fluid valves A and B until clean, air-free fluid comes from valves. Close valves.

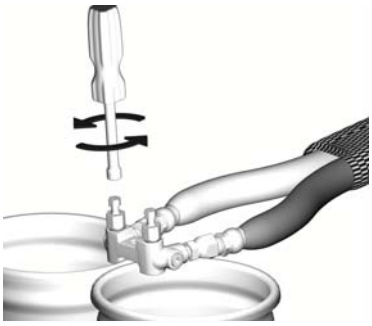

3. Set temperatures

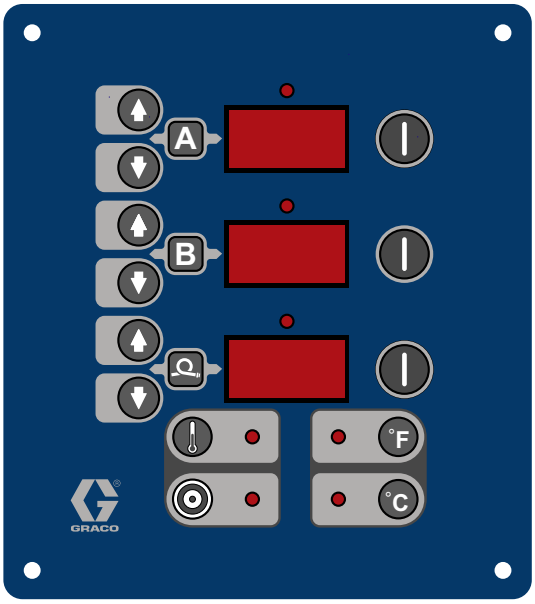

Temperature Controls and Indicators, see page 13

This equipment is used with heated fluid, which can cause equipment surfaces to become very hot. To avoid severe burns: • Do not touch hot fluid or equipment. • Allow equipment to cool completely before touching it. Wear gloves if fluid temperature exceeds 110°F (43°C).						

a. Turn main power ON 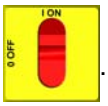 .

b. Press °F or °C to change temperature scale.

c. Press .

d. To set A heat zone target temperature, press ▲ or ▼ until display shows desired temperature. Repeat for B and zones.

NOTE:

For zone only, if FTS is disconnected at startup, display will show hose current (0A). See step j, page 26.

e. Press to display actual temperatures.

Do not turn on hose heat without fluid in hoses.						

f. Turn on heat zone by pressing .

Preheat hose (15-60 min). Indicator will flash very slowly when fluid reaches target temperature. Display shows actual fluid temperature in hose near FTS.

Thermal expansion can cause overpressurization, resulting in equipment rupture and serious injury, including fluid injection. Do not pressurize system when preheating hose.						

g. Turn on A and B heat zones by pressing for each zone.

h. Hold to view electrical currents for each zone.

i. Hold to view heater control circuit board temperature.

j. Manual current control mode only:

When in manual current control mode, monitor hose temperature with thermometer. Install per instructions below. Thermometer reading must not exceed 160°F (71°C). Never leave machine unattended when in manual current control mode.

If FTS is disconnected or display shows diagnostic code E04, turn main power switch OFF 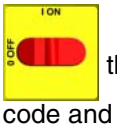 then ON 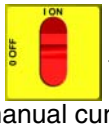 to clear diagnostic code and enter manual current control mode.

display will show current to hose. Current is not limited by target temperature.

To prevent overheating, install hose thermometer close to gun end, within operator view. Insert thermometer through foam cover of A component hose so stem is next to inner tube. Thermometer reading will be about 20°F less than actual fluid temperature.

If thermometer reading exceeds 160°F (71°C), reduce current with key.

4. Set pressure

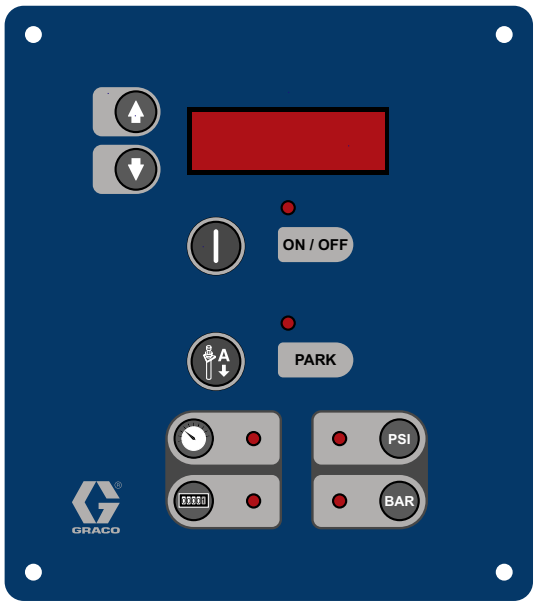

Motor Controls and Indicators, see page 15

a. Press to display the pressure reading.

b. Press motor . Motor and pumps start. Display shows system pressure.

NOTE:
Motor must rotate counterclockwise when viewed from shaft end. See **Connect electrical cord**, page 18.

c. Adjust hydraulic pressure control until display shows desired fluid pressure.

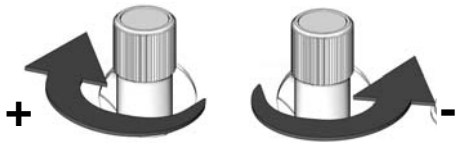

ti7731a ti7732a

NOTICE

Never adjust hydraulic pressure while spraying. This will result in over pressure alarm E23.

NOTE:
If display pressure is greater than desired pressure, reduce the hydraulic pressure and trigger gun to reduce pressure.

NOTE:

Check the pressure of each proportioning pump using the component A and B gauges. The pressures should be approximately equal and must remain fixed.

d. To display cycle count, press .

NOTE:

To clear counter, press and hold for 3 sec.

e. Press PSI or BAR to change pressure scale.

5. Change pressure imbalance setting (optional)

The pressure imbalance function (status code 24, page 35) detects conditions that can cause off-ratio spray, such as loss of feed pressure/supply, pump seal failure, clogged fluid inlet filter, or a fluid leak.

NOTE:

Code 24 (pressure imbalance) is set to an alarm as the default. To change to a warning, see H-VR Repair-Parts manual 313540.

The pressure imbalance default is factory-set at 500 psi (3.5 MPa, 35 bar). For tighter ratio error detection, select a lower value. For looser detection or to avoid nuisance alarms, select a higher value.

a. Turn main power switch OFF .

b. Press and hold PSI or BAR , then turn main power switch ON . Display will read dP500 for psi or dP_35 for bar.

c. Press or to select desired pressure differential (100-999 in increments of 100 psi, or 7-70 in increments of 7 bar). See TABLE 4.

Table 4: Available Pressure Imbalance Settings

PSI	BAR	PSI	BAR
100	7	600	42
200	14	700	49
300	21	800	56
400	28	900	63
*500	*35	999	69

* Factory default setting.

d. Turn main power switch OFF to save changes.

Spraying

1. Engage gun piston safety lock.

ti2409a

2. Close gun fluid manifold valves A and B.

ti2728a

3. Attach gun fluid manifold. Connect gun air line. Open air line valve.

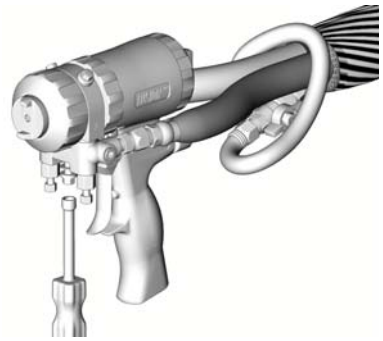

ti2543a

4. Set PRESSURE RELIEF/SPRAY valves (SA, SB) to SPRAY .

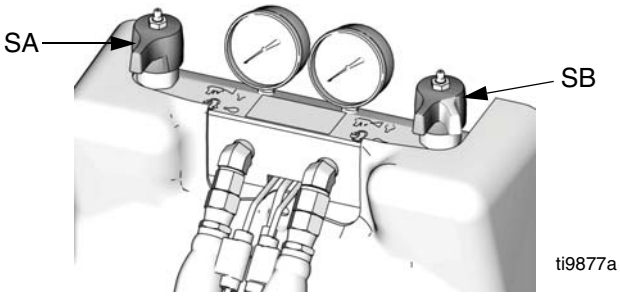

ti9877a

5. Check that heat zones are on and temperatures are on target, page 25.

6. Press motor to start motor and pumps.

7. Check fluid pressure display while the gun is detriggered and adjust as necessary, page 26.

8. Check fluid pressure gauges (GA, GB) to ensure proper pressure balance. If imbalanced, reduce pressure of higher component by **slightly** turning PRESSURE RELIEF/SPRAY valve for that component toward PRESSURE RELIEF/CIRCULATION , until gauges show balanced pressures.

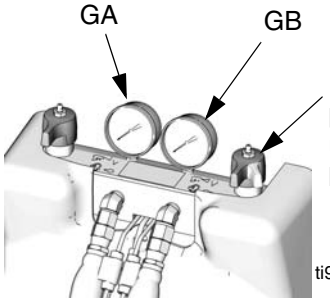

In this example, B side pressure is higher, so use the B side valve to balance pressures.

ti9877a

9. Open gun fluid manifold valves A and B.

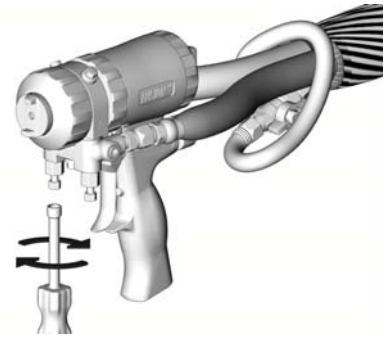

ti2414a

NOTE:

On impingement guns, **never** open fluid manifold valves or trigger gun if pressures are imbalanced.

10. Disengage gun piston safety lock.

ti2410a

11. Test spray onto cardboard. Adjust pressure and temperature to get desired results.

12. Equipment is ready to spray.

NOTE:

If you stop spraying for a period of time, the unit will enter standby (if enabled). See page 30.

Standby

If you stop spraying for a period of time, the unit will enter standby by shutting down the electric motor and hydraulic pump, to reduce equipment wear and minimize heat buildup. The ON/OFF LED and the pressure/cycle display on the motor control panel will flash when in standby.

NOTE:

The A , B , and heat zones will not be shut off in standby.

To restart, spray off target for 2 sec. The system will sense the pressure drop and the motor will ramp up to full speed in a few seconds.

NOTE:
This feature is disabled from the factory.

To activate or disable standby, adjust DIP switch #3 on the motor control board. See Reactor Repair-Parts manual 313540.

The idle time before entering standby is user-settable as follows:

1. Turn main power switch OFF .
2. Press and hold , then turn main power switch ON .
3. Press or to select desired timer setting (5-20, in 5 minute increments). This sets the length of inactive time before the unit will enter standby.
4. Turn main power switch OFF to save changes.

Shutdown

1. Shut off A , B , and heat zones.
2. Park pumps.
   a. Press .
   b. Trigger gun until pump A stops in the retracted position and the pressure of both pumps bleeds down.
3. Turn main power OFF .
4. Close both fluid supply valves (FV).

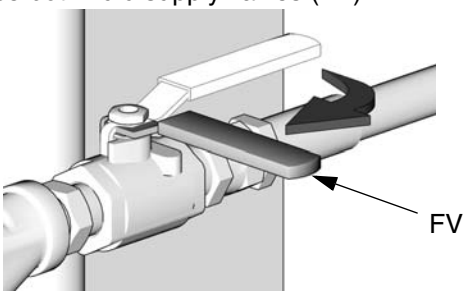

ti10971a

5. Relieve pressure, page 31.

Pressure Relief Procedure

1. Relieve pressure in gun and perform gun shutdown procedure. See gun manual.
2. Close gun fluid manifold valves A and B.

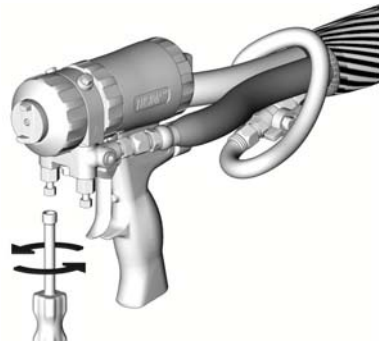

ti2421a

3. Shut off feed pumps and agitator, if used.
4. Turn PRESSURE RELIEF/SPRAY valves (SA, SB) to PRESSURE RELIEF/CIRCULATION. Route fluid to waste containers or supply tanks. Ensure gauges drop to 0.

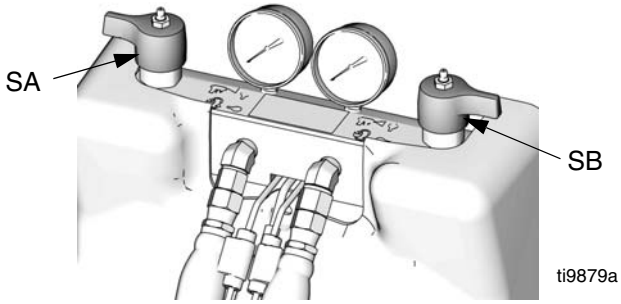

ti9879a

5. Engage gun piston safety lock.

ti2409a

6. Disconnect gun air line and remove gun fluid manifold.

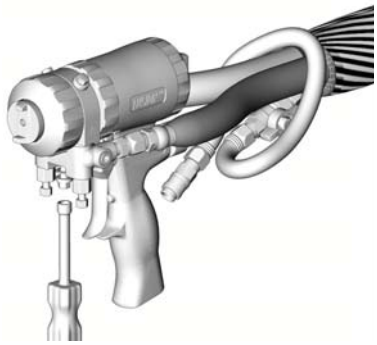

ti2554a

Fluid Circulation

Circulation Through Reactor

Do not circulate fluid containing a blowing agent without consulting with your material supplier regarding fluid temperature limits.

To circulate through gun manifold and preheat hose, see page 33.

1. Load fluid with feed pumps, page 24.

Do not install shutoffs downstream of the PRESSURE RELIEF/SPRAY valve outlets (BA, BB). The valves function as overpressure relief valves when set to SPRAY . Lines must be open so valves can automatically relieve pressure when machine is operating.

2. See **Typical Installation, with circulation**, page 8. Route circulation lines back to respective component A or B supply drum. Use hoses rated at the maximum working pressure of this equipment. See **Technical Data**, page 40.
3. Set PRESSURE RELIEF/SPRAY valves (SA, SB) to PRESSURE RELIEF/CIRCULATION .

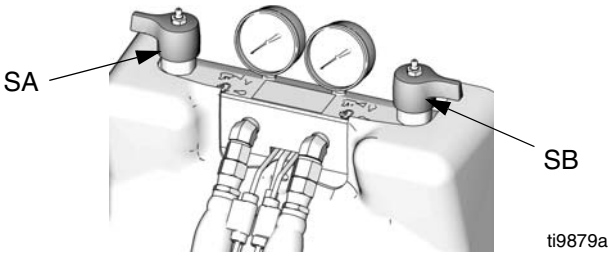

4. Turn main power ON .
5. Set temperature targets, see page 25. Turn on A and B heat zones by pressing .

   Do not turn on heat zone unless hoses are already loaded with fluid.
6. Press to display actual temperatures.
7. Before starting motor, reduce hydraulic pressure to the minimum required to circulate fluid until A and B temperatures reach targets.

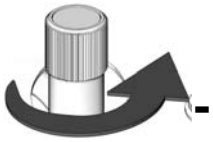

8. Press motor to start motor and pumps. Circulate fluid at lowest possible pressure until temperatures reach targets.
9. Turn on heat zone by pressing .
10. Set PRESSURE RELIEF/SPRAY valves (SA, SB) to SPRAY .

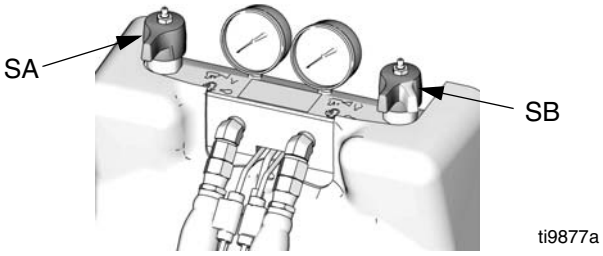

Circulation Through Gun Manifold

Do not circulate fluid containing a blowing agent without consulting with your material supplier regarding fluid temperature limits.

Circulating fluid through the gun manifold allows rapid preheating of hose.

1. Install gun fluid manifold (P) on Part 246362 accessory circulation kit (CK). Connect high pressure circulation lines (R) to circulation manifold.

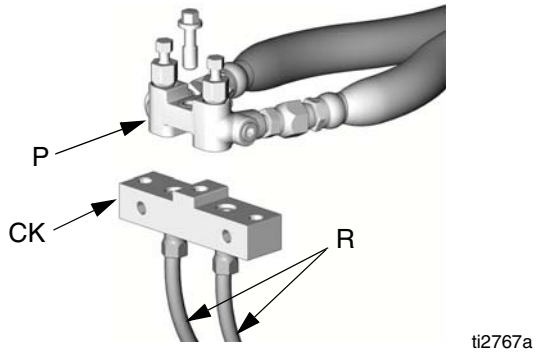

2. Route circulation lines back to respective component A or B supply drum. Use hoses rated at the maximum working pressure of this equipment. See **Typical Installation, without circulation**, page 9.
3. Follow **Select ratio**, page 22.
4. Turn main power ON .
5. Set temperature targets, see page 25. Turn on A, B, and heat zones by pressing I.
6. Press to display actual temperatures.
7. Before starting motor, reduce hydraulic pressure to the minimum required to circulate fluid until A and B temperatures reach targets.

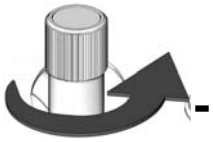

8. Press motor I to start motor and pumps. Circulate fluid at lowest possible pressure until temperatures reach targets.

Diagnostic Codes

Temperature Control Diagnostic Codes

Temperature control diagnostic codes appear on temperature display.

These alarms turn off heat. E99 clears automatically when communication is regained. Codes E03 through E06 can be cleared by pressing . For other codes, turn main power OFF

then ON

to clear.

See repair manual for corrective action.

Code	Code Name	Alarm Zone
01	High fluid temperature	Individual
02	High current	Individual
03	No current	Individual
04	FTS not connected	Individual
05	Board overtemperature	Individual
06	Loss of zone communication	Individual
30	Momentary loss of communication	All
99	Loss of display communication	All

NOTE:

For hose zone only, if FTS is disconnected at startup, display will show hose current 0A.

Motor Control Diagnostic Codes

Motor control diagnostic codes E21 through E27 appear on pressure display.

There are two types of motor control codes: alarms and warnings. Alarms take priority over warnings.

See repair manual for corrective action.

Alarms

Alarms turn off Reactor. Turn main power OFF

then ON

to clear.

NOTE:
Alarms can also be cleared, except for code 23, by pressing .

NOTE:
Code 24 (pressure imbalance) is set to an alarm default of 500 psi (3.5 MPa, 35 bar). To change to a warning, see Reactor Repair-Parts manual 313540. To change the default pressure imbalance setting, see page 27.

Warnings

Reactor will continue to run. Press to clear. A warning will not recur for a predetermined amount of time (varies for different warnings), or until main power is turned OFF

then ON 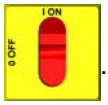

.

Code No.	Code Name	Alarm or Warning
21	No transducer (component A)	Alarm
22	No transducer (component B)	Alarm
23	High pressure	Alarm
24	Pressure imbalance	Selectable; see repair manual
27	High motor temperature	Alarm
30	Momentary loss of communication	Alarm
31	Pumpline switch failure/high cycle rate	Alarm
99	Loss of communication	Alarm

Maintenance

- Inspect hydraulic and fluid lines for leaks daily.
- Clean up all hydraulic leaks; identify and repair cause of leak.
- Inspect fluid inlet strainer screens daily, see below.
- Grease circulation valves weekly with Fusion grease (117773).

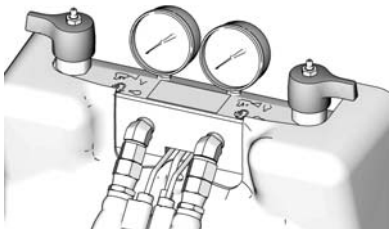

ti9879a

- Check hydraulic fluid level weekly. Check hydraulic fluid level on dipstick (DS). Fluid level must be between indent marks (IM) on dipstick. Refill as required with approved hydraulic fluid; see **Technical Data** on page 40 and the **Approved Anti-Wear (AW) Hydraulic Oils** table in the Reactor Repair-Parts manual 313540. If fluid is dark in color, change fluid and filter.

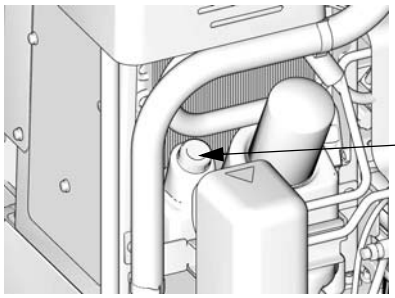

ti10003a

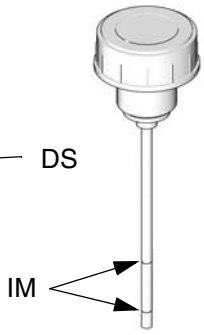

ti7861a

- Change break-in oil in a new unit after first 250 hours of operation or within 3 months, whichever comes first. See Table 4 for recommended frequency of oil changes

Table 5: Frequency of Oil Changes

Ambient Temperature	Recommended Frequency
0 to 90°F (-17 to 32°C)	1000 hours or 12 months, whichever comes first
90°F and above (32°C and above)	500 hours or 6 months, whichever comes first

- Keep component A from exposure to moisture in atmosphere, to prevent crystallization.
- Clean gun mix chamber ports regularly. See gun manual.
- Clean gun check valve screens regularly. See gun manual.
- Use compressed air to prevent dust buildup on control boards, fan, motor (under shield), and hydraulic oil coolers.
- Keep vent holes on bottom of electrical cabinet open.

Fluid Inlet Strainer Screen

The inlet strainers filter out particles that can plug the pump inlet check valves. Inspect the screens daily as part of the startup routine, and clean as required.

Use clean chemicals and follow proper storage, transfer, and operating procedures, to minimize contamination of the A-side screen.

NOTE:

Clean the A-side screen only during daily startup. This minimizes moisture contamination by immediately flushing out any isocyanate residue at the start of dispensing operations.

1. Close the fluid inlet valve at the pump inlet and shut off the appropriate feed pump. This prevents material from being pumped while cleaning the screen.
2. Place a container under the strainer manifold (59d) to catch fluid. Remove the strainer plug (59j).
3. Remove the screen (59g) from the strainer manifold. Thoroughly flush the screen with compatible solvent and shake it dry. Inspect the screen. If more than 25% of the mesh is blocked, replace the screen. Inspect the gasket (59h) and replace as required.
4. Ensure the pipe plug (59k) is screwed into the strainer plug (59j). Install the strainer plug with the screen (59g) and gasket (59h) in place and tighten. Do not overtighten. Let the gasket make the seal.
5. Open the fluid inlet valve, ensure that there are no leaks, and wipe the equipment clean. Proceed with operation.

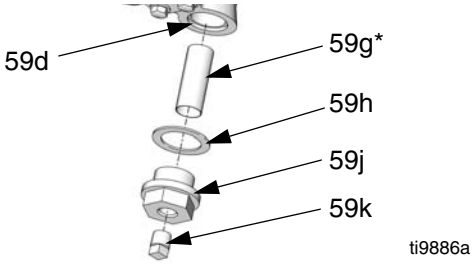

FIG. 11: Fluid Inlet Strainer

* See Reactor Repair-Parts manual 313540 for fluid filter screen replacements.

Flushing

Flush equipment only in a well-ventilated area. Do not spray flammable fluids. Do not turn on heaters while flushing with flammable solvents.

- Flush out old fluid with new fluid, or flush out old fluid with a compatible solvent before introducing new fluid.
- Use the lowest possible pressure when flushing.
- All fluid components are compatible with common solvents. Use only moisture-free solvents.
- To flush feed hoses, pumps, and heaters separately from heated hoses, set PRESSURE RELIEF/SPRAY valves (SA, SB) to PRESSURE RELIEF/CIRCULATION . Flush through bleed lines (N).

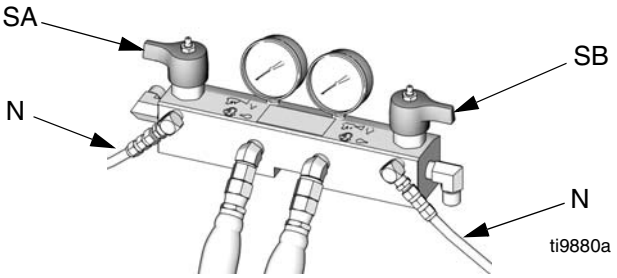

- To flush entire system, circulate through gun fluid manifold (with manifold removed from gun).
- To prevent moisture from reacting with isocyanate, always leave the system dry or filled with a moisture-free plasticizer or oil. Do not use water. See page 6.

Dimensions

Dimension	in. (mm)
A (height)	57.31 (1455.42)
B (width)	37.86 (961.6)
C (depth)	33 (838.2)

Dimension	in. (mm)
D (front and rear mounting holes)	32.5 (825.5)
F (side mounting holes)	30.375 (7715)
G (mounting post inner diameter)	0.44 (11)

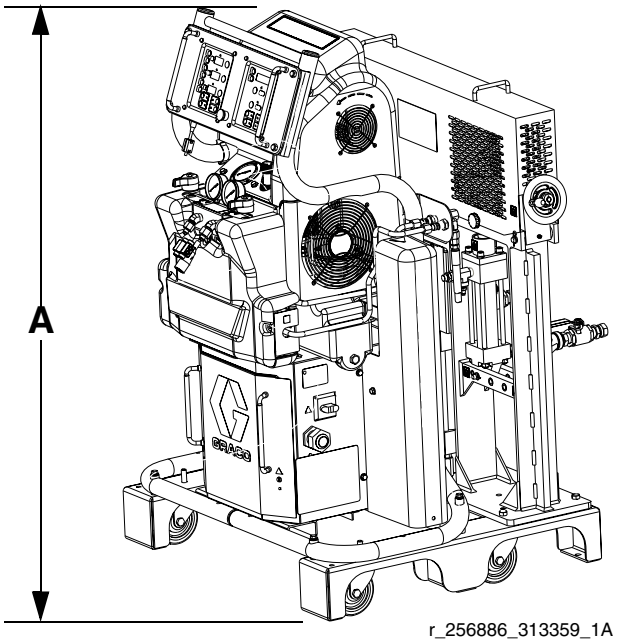

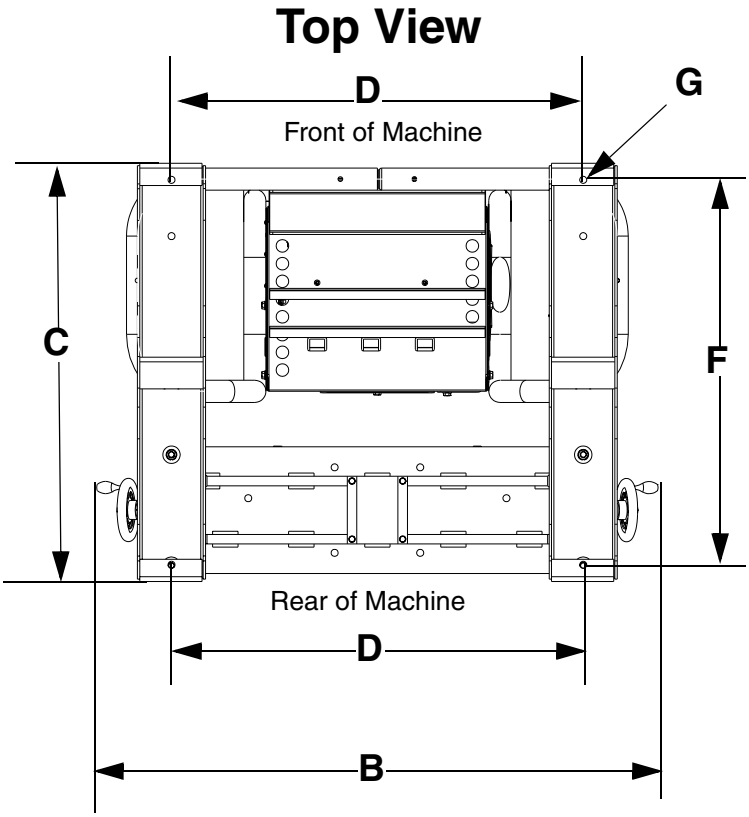

Technical Data

Category	Data
Maximum Fluid Working Pressure	3500 psi (24.1 MPa, 241 bar)
Fluid Inlets	3/4 npsm union in 1 in. npt(f) ball valve
Fluid Outlets	Component A (ISO): #8 (1/2 in.) JIC, with #5 (5/16 in.) JIC adapter Component B (RES): #10 (5/8 in.) JIC, with #6 (3/8 in.) JIC adapter
Fluid Circulation Ports	1/4 npsm(m), with plastic tubing, 250 psi (1.75 MPa, 17.5 bar) maximum
Maximum Fluid Temperature	190°F (88°C)
Maximum Output (10 weight oil at ambient temperature) 1:1	Model H-VR: 3.0 gpm (11.4 liter/min) (60 Hz)
Output per Cycle	Variable: 2 oz.- 5 oz. (60 cc - 150 cc) per pump*
Stroke Length	Variable: 2 in. - 5 in. (5.08 cm - 12.7 cm)
Line Voltage Requirement	230V 3 phase units: 195-264 Vac, 50/60 Hz 400V 3 phase units: 338-457 Vac, 50/60 Hz
Amperage Requirement	See **Models**, page 2.
Heater Power (A and B heaters total, no hose)	See **Models**, page 2.
Hydraulic reservoir capacity	3.5 gal. (13.6 liters)
Recommended hydraulic fluid	Citgo A/W Hydraulic Oil, ISO Grade 46
Sound power, per ISO 9614-2	90.9 dB(A)
Sound pressure, 1 m from equipment	84.0 dB(A)
Weight	955 lb (433 kg)
Wetted Parts	Aluminum, stainless steel, zinc-plated carbon steel, brass, carbide, chrome, fluoroelastomer, PTFE, ultra-high molecular weight polyethylene, chemically resistant o-rings

*Output example: 2.5:1 ratio = 150 cc (B side):60 cc (A side)
2.5:1 output = 150 cc (B side) + 60 cc (A side) = 210 cc per cycle

All other brand names or marks are used for identification purposes and are trademarks of their respective owners.

Performance Charts

Foam Performance Chart

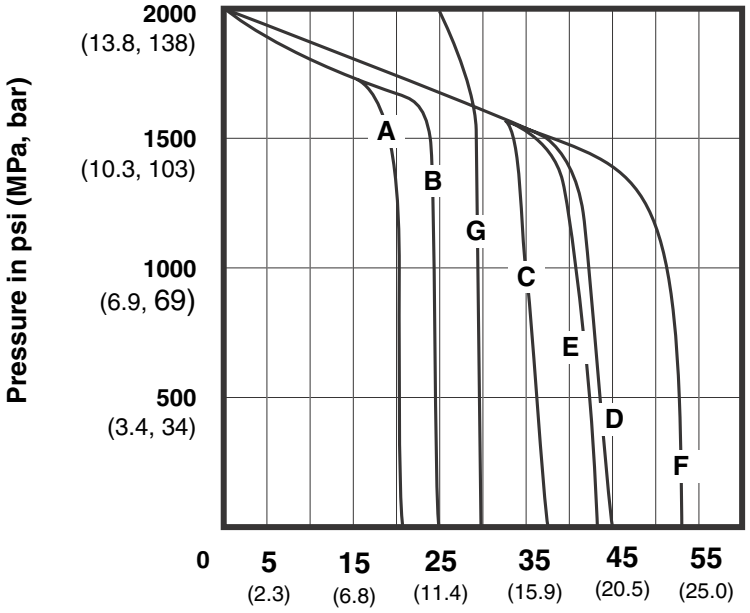

KEY
A = H-25 at 50 Hz
B = H-25 at 60 Hz
C = H-40 at 50 Hz
D = H-40 at 60 Hz
E = H-50 at 50 Hz
❄F = H-50 at 60 Hz
G = H-VR at 60 Hz

❄ *Pressure flow curve for model 253725 (H-50 230V 1 phase) not shown. Maximum pressure limited to 1700 psi (11.7 MPa, 11.7 bar)*

Coatings Performance Chart

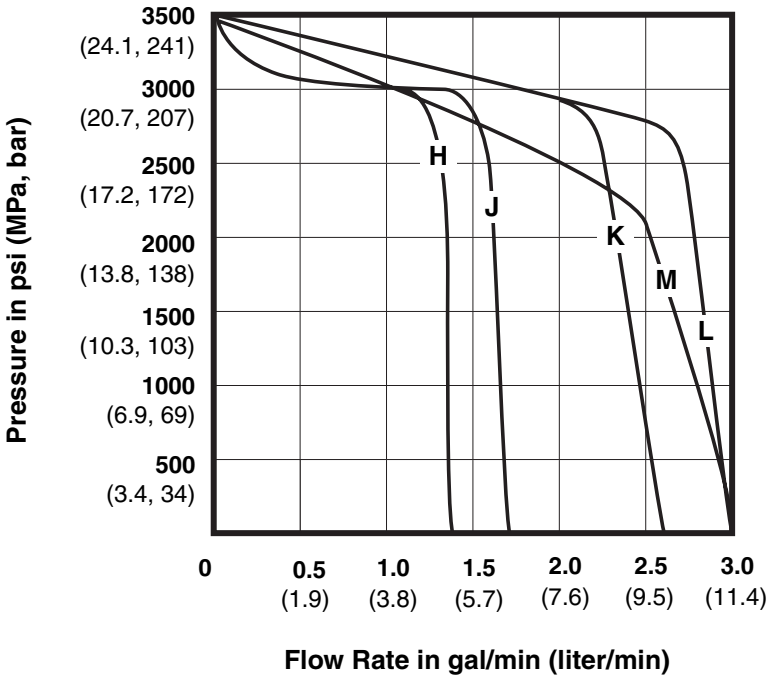

KEY
H = H-XP2 at 50 Hz
J = H-XP2 at 60 Hz
K = H-XP3 at 50 Hz
L = H-XP3 at 60 Hz
M = H-VR at 60 Hz

Heater Performance Chart

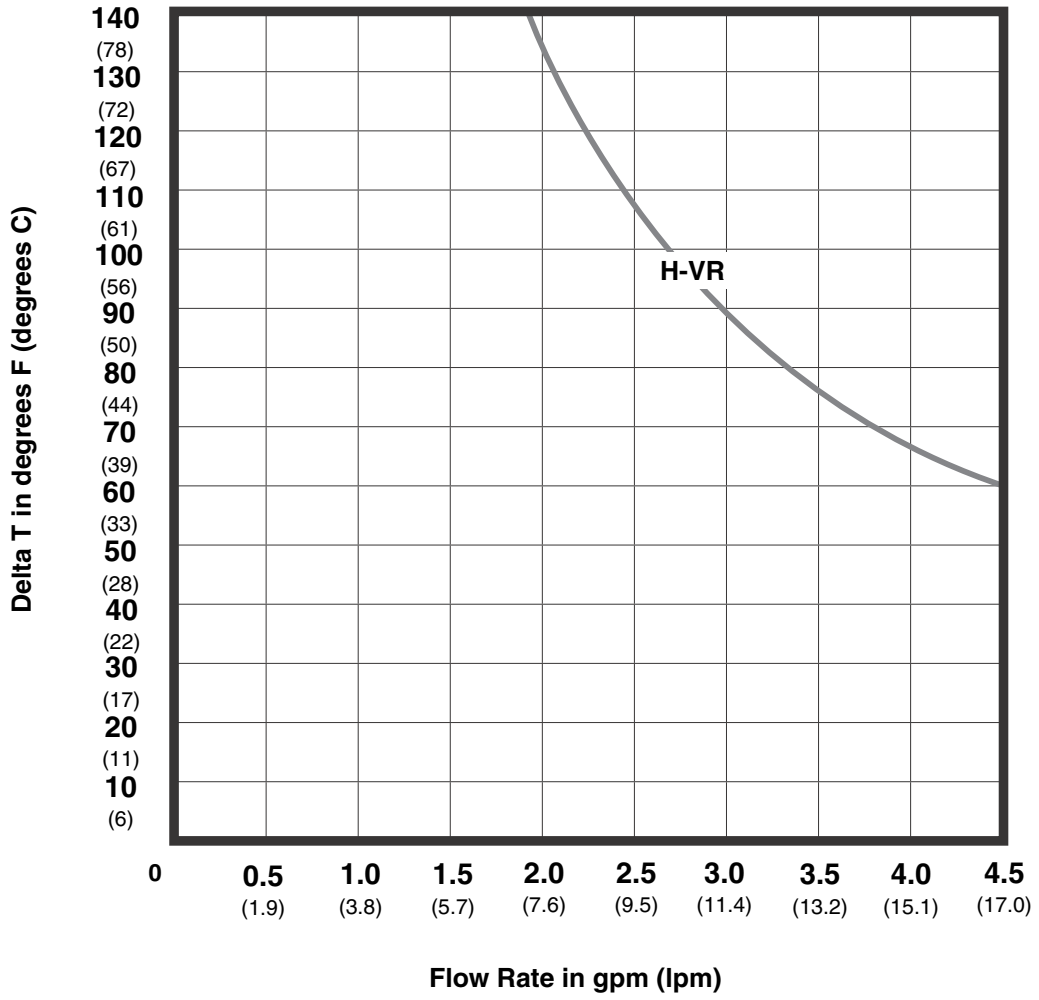

KEY
H-VR = 15.3 kW

★ *Heater performance data is based on testing with 10 wt. hydraulic oil and 230V across heater power wires.*

Graco Standard Warranty

Graco warrants all equipment referenced in this document which is manufactured by Graco and bearing its name to be free from defects in material and workmanship on the date of sale to the original purchaser for use. With the exception of any special, extended, or limited warranty published by Graco, Graco will, for a period of twelve months from the date of sale, repair or replace any part of the equipment determined by Graco to be defective. This warranty applies only when the equipment is installed, operated and maintained in accordance with Graco's written recommendations.

This warranty does not cover, and Graco shall not be liable for general wear and tear, or any malfunction, damage or wear caused by faulty installation, misapplication, abrasion, corrosion, inadequate or improper maintenance, negligence, accident, tampering, or substitution of non-Graco component parts. Nor shall Graco be liable for malfunction, damage or wear caused by the incompatibility of Graco equipment with structures, accessories, equipment or materials not supplied by Graco, or the improper design, manufacture, installation, operation or maintenance of structures, accessories, equipment or materials not supplied by Graco.

This warranty is conditioned upon the prepaid return of the equipment claimed to be defective to an authorized Graco distributor for verification of the claimed defect. If the claimed defect is verified, Graco will repair or replace free of charge any defective parts. The equipment will be returned to the original purchaser transportation prepaid. If inspection of the equipment does not disclose any defect in material or workmanship, repairs will be made at a reasonable charge, which charges may include the costs of parts, labor, and transportation.

THIS WARRANTY IS EXCLUSIVE, AND IS IN LIEU OF ANY OTHER WARRANTIES, EXPRESS OR IMPLIED, INCLUDING BUT NOT LIMITED TO WARRANTY OF MERCHANTABILITY OR WARRANTY OF FITNESS FOR A PARTICULAR PURPOSE.

Graco's sole obligation and buyer's sole remedy for any breach of warranty shall be as set forth above. The buyer agrees that no other remedy (including, but not limited to, incidental or consequential damages for lost profits, lost sales, injury to person or property, or any other incidental or consequential loss) shall be available. Any action for breach of warranty must be brought within two (2) years of the date of sale.

GRACO MAKES NO WARRANTY, AND DISCLAIMS ALL IMPLIED WARRANTIES OF MERCHANTABILITY AND FITNESS FOR A PARTICULAR PURPOSE, IN CONNECTION WITH ACCESSORIES, EQUIPMENT, MATERIALS OR COMPONENTS SOLD BUT NOT MANUFACTURED BY GRACO. These items sold, but not manufactured by Graco (such as electric motors, switches, hose, etc.), are subject to the warranty, if any, of their manufacturer. Graco will provide purchaser with reasonable assistance in making any claim for breach of these warranties.

In no event will Graco be liable for indirect, incidental, special or consequential damages resulting from Graco supplying equipment hereunder, or the furnishing, performance, or use of any products or other goods sold hereto, whether due to a breach of contract, breach of warranty, the negligence of Graco, or otherwise.

FOR GRACO CANADA CUSTOMERS
The Parties acknowledge that they have required that the present document, as well as all documents, notices and legal proceedings entered into, given or instituted pursuant hereto or relating directly or indirectly hereto, be drawn up in English. Les parties reconnaissent avoir convenu que la rédaction du présente document sera en Anglais, ainsi que tous documents, avis et procédures judiciaires exécutés, donnés ou intentés, à la suite de ou en rapport, directement ou indirectement, avec les procédures concernées.

Graco Information

For the latest information about Graco products, visit www.graco.com.

TO PLACE AN ORDER, contact your Graco distributor or call to identify the nearest distributor.
Phone: 612-623-6921 **or Toll Free:** 1-800-328-0211 **Fax:** 612-378-3505

All written and visual data contained in this document reflects the latest product information available at the time of publication. Graco reserves the right to make changes at any time without notice.

Original instructions. This manual contains English. MM 313539

Graco Headquarters: Minneapolis
International Offices: Belgium, China, Japan, Korea

GRACO INC. P.O. BOX 1441 MINNEAPOLIS, MN 55440-1441
Copyright 2009, Graco Inc. is registered to ISO 9001
www.graco.com
Revised 08/2010